GT8961 GT8962 GT8964
6ns, 3V/5V，Ultra-High-Speed Rail-to-Rail Comparator

1 Features	2 Application
- Ultra-High speed: 6ns propagation delay **- Low offset voltage: 6mV (max)** **- Rail to Rail input and output** **- 6mV internal hysteresis for clean switching** **- Support CMOS or TTL logic** **- Supply range: +2.5 V to +5.5 V** **- Quiescent current: 2 mA per comparator**	**- High-speed line or digital line receivers** **- High speed sampling circuits** **- High-density systems** **- Threshold detectors** **- Portable equipment**

3 Description	Circuit Diagram
The GT896X series are low-power, ultra-high-speed comparators with internal hysteresis, which feature a fast 6ns propagation delay. These devices are optimized for single +3V or +5V operation, and consume only 2mA supply current. The GT896X series support rail-to-rail input and output operation. The input common mode voltage range is from -0.1V to (V+) +0.1V. The GT896X series have an internal hysteresis for reducing comparator sensitivity to noise, even when the input signals move slowly. All features are specified over the extended -40°C to +125°C temperature range.	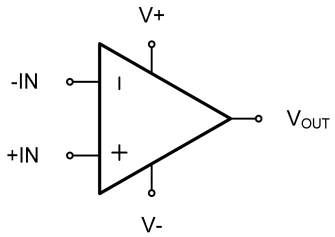

4 Device Summary, Pin and Packages

Table 4-1. Device Summary(1)

Serial Name	Part Name	Package	Body Size (Nom)	Marking(2)	MSL(3)	Package Qty
GT8961	GT8961C5	SC70-5	2.10mm×1.25mm×1.00mm	GT8961 XXXX	3	Tape and Reel,3000
	GT8961BC5	SC70-5	2.10mm×1.25mm×1.00mm	GT8961B XXXX	3	Tape and Reel,3000
	GT8961S5	SOT23-5	2.90mm×1.60mm×1.10mm	GT8961 XXXXX	3	Tape and Reel,3000
	GT8961BS5	SOT23-5	2.90mm×1.60mm×1.10mm	GT8961B XXXXX	3	Tape and Reel,3000
GT8962	GT8962M8	MSOP8	3.00mm×3.00mm×1.10mm	GT8962 XXXXXXX	3	Tape and Reel,4000
	GT8962P8	SOP8	4.90mm×3.90mm×1.75mm	GT8962 XXXXXXX	3	Tape and Reel,4000
GT8964	GT8964TD	TSSOP14	5.00mm×4.40mm×1.20mm	GT8964 XXXXXXX	3	Tape and Reel,4000
	GT8964PD	SOP14	8.65mm×3.90mm×1.75mm	GT8964 XXXXXXX	3	Tape and Reel,4000

(1) For all available packages, please contact product sales.
(2) There may be additional marking, which relates to the lot trace code information (data code and vendor code), the logo or the environmental category on the device.
(3) MSL, The Moisture Sensitivity Level rating according to the JEDEC industry standard classifications.
(4) "XXXXX" in Marking will be appeared as the batch code.

4 Device Summary, Pin and Packages(Continued)

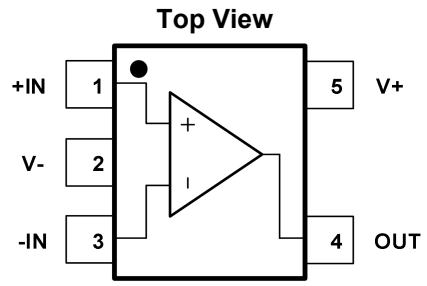

Fig.4-1. GT8961: C5(SC70-5) Package

GT8961: S5(SOT23-5) Package

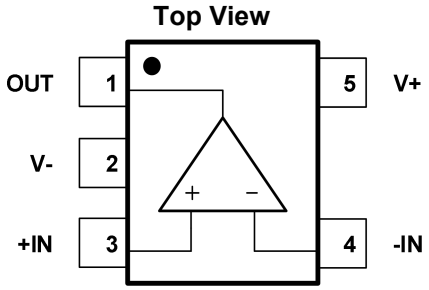

Fig.4-2. GT8961: BC5(SC70-5) Package

GT8961: BS5(SOT23-5) Package

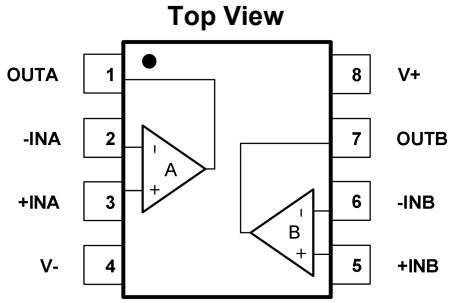

Fig.4-3. GT8962: M8(MSOP8) Package

GT8962: P8(SOP8) Package

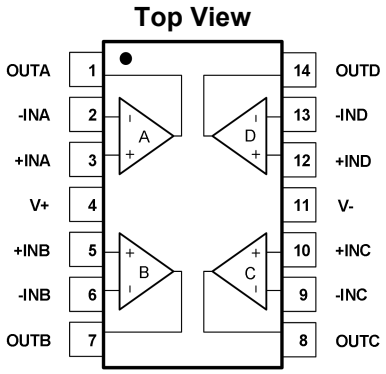

Fig.4-4. GT8964: TD(TSSOP14) Package

GT8964: PD(SOP14) Package

Table 4-2 Pin Definition

Name	Pin				I/O	Description
	C5 S5	BC5 BS5	M8 P8	TD PD		
OUTA	4	1	1	1	O	Output A
-INA	3	4	2	2	I	Negative (inverting) input A
+INA	1	3	3	3	I	Positive(noninverting) input A
V+	5	5	8	4	—	Positive (highest) power supply
+INB	—	—	5	5	I	Positive(noninverting) input B
-INB	—	—	6	6	I	Negative (inverting) input B
OUTB	—	—	7	7	O	Output B
OUTC	—	—	—	8	O	Output C
-INC	—	—	—	9	I	Negative (inverting) input C
+INC	—	—	—	10	I	Positive(noninverting) input C
V-	2	2	4	11	—	Negative (lowest) power supply
+IND	—	—	—	12	I	Positive(noninverting) input D
-IND	—	—	—	13	I	Negative (inverting) input D
OUTD	—	—	—	14	O	Output D

5 Voltage, Temperature, ESD and Thermal Ratings

5.1 Absolute Maximum Ratings(1) (2)

Parameters	Min.	Max.	Unit
Supply Voltage, V_S=(V+) - (V-)		6.5	V
Input Voltage	(V-)-0.3	(V+)+0.3	V
Maximum Junction Temperature	-55	150	°C
Storage Temperature Range	-55	150	°C

(1) Stresses above these ratings may cause permanent damage. Exposure to absolute maximum conditions for extended periods may degrade device reliability. These are stress ratings only, and functional operation of the device at these or any other conditions beyond those specified is not implied.

(2) Input terminals are diode-clamped to the power-supply rails. Input signals that can swing more than 0.3V beyond the supply rails should be current- limited to 10mA or less.

5.2 ESD Ratings

ESD			Value	Unit
V(ESD)	Electrostatic Discharge	Human-Body Model (HBM)(1)	6.5 K	V
		Charged-Device Model (CDM)(2)	2 K	V

(1) JEDEC document JEP155 states that 500-V HBM allows safe manufacturing with a standard ESD control process.

(2) JEDEC document JEP157 states that 250-V CDM allows safe manufacturing with a standard ESD control process.

5.3 Recommended Operating Conditions

Over operating free-air temperature range (unless otherwise noted)

Symbol	Parameters	Min	Max	Unit
V_S	Single-Supply, V_S=(V+) - (V-)	2.5	5.5	V
	Dual-Supply,V_S=(V+) - (V-)	±1.25	±2.75	V
TA	Operating Temperature	-40	125	°C

5.4 Thermal Information

Package Type	θ_{JA}	θ_{JC}	Unit
SC70-5	400	150	°C/W
SOT23-5	250	81	°C/W
MSOP8	210	45	°C/W
SOP8	158	43	°C/W
TSSOP14	180	35	°C/W
SOP14	120	36	°C/W

6 Electrical Specifications

V_S= +2.5V to +5.5V, V_{IN+} = V_S, V_{IN-} =0V, R_{PU}=10kΩ, and C_L=15pF. Typical values are at TA=+25°C. FULL=–40°C to +125°C (unless otherwise noted)

Parameter	Symbol	Test Conditions	Vs	TA	Min	Typ	Max	Units
Operating Voltage	V_S		2.5V to 5.5V	FULL	2.5		5.5	V
Input Common Mode Voltage Range	V_{CM}		2.5V to 5.5V	FULL	(V-)-0.1		(V-)+0.1	V
Input Offset Voltage	V_{OS}	V_{CM}=1.2V	5V	+25°C		0.5		mV
				FULL	-10		10	
Quiescent Current (per Comparator)	IQ		5V	+25°C		2		mA
				FULL			3.4	
Input Hysteresis Voltage	V_{HYST}	V_{CM}=1.2V		FULL		6		mV
Input Bias Current	I_B		5V	+25°C		20		pA
Input Offset Current	I_{OS}		5V	+25°C		20		pA
Common Mode Rejection Range	CMRR	V_{CM}= V- to V+	5V	+25°C		72		dB
Power Supply Rejection Ration	PSRR		5V	+25°C		73		dB
High-Level Output Voltage	V_{OH}	I_{OUT}=-4mA, V_{ID}=500mV	2.5V to 5.5V	FULL	(V+)-0.2	(V+)-0.1		V
		I_{OUT}=-0.4mA, V_{ID}=500mV			(V+)-0.03	(V+)-0.01		
Low-Level Output Voltage	V_{OL}	I_{OUT}=-4mA, V_{ID}=500mV	2.5V to 5.5V	FULL		100	130	mV
		I_{OUT}=-0.4mA, V_{ID}=500mV				20	25	
Output Short-Circuit Current	$I_{SOURCING}$		5V	FULL		90		mA
	$I_{SINKING}$					100		
Propagation Delay (Low-to-High)	T_{PLH}	V_{CM}=0V, Overdrive = 100mV	5V	FULL		5.7		ns
Propagation Delay (High-to-Low)	T_{PHL}	V_{CM}=0V, Overdrive = 100mV	5V	FULL		5.3		ns
Propagation Delay Skew	T_{PDSKEW}	V_{CM}=0V, Overdrive = 100mV	5V	FULL		0.4		ns
Rising Time	T_R		5V	FULL		1.3		ns
Falling Time	T_F		5V	FULL		1.2		ns

7 Typical Characteristics

V_S=5V, C_L=10pF, and V_{CM} = 0 , TA=+25°C. (unless otherwise noted)

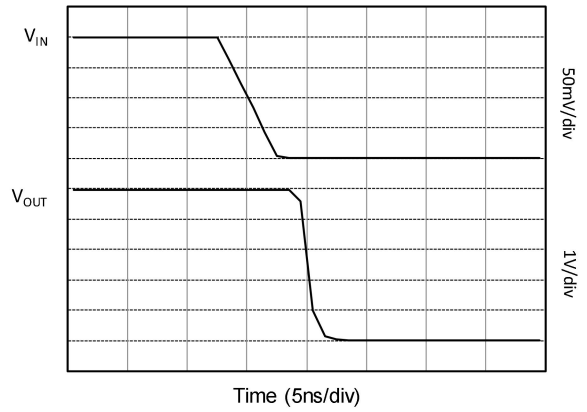

Fig.7-1. Propagation Delay (High to Low)

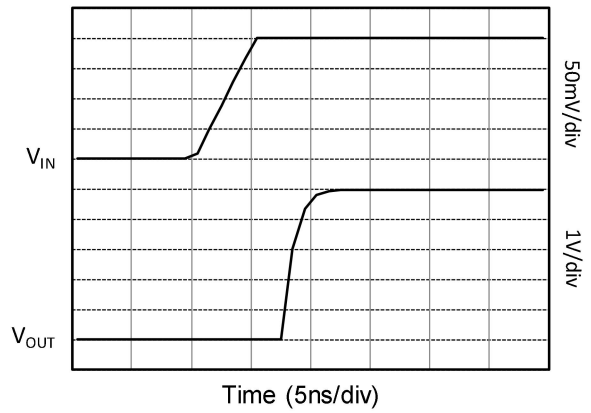

Fig.7-2. Propagation Delay (Low to High)

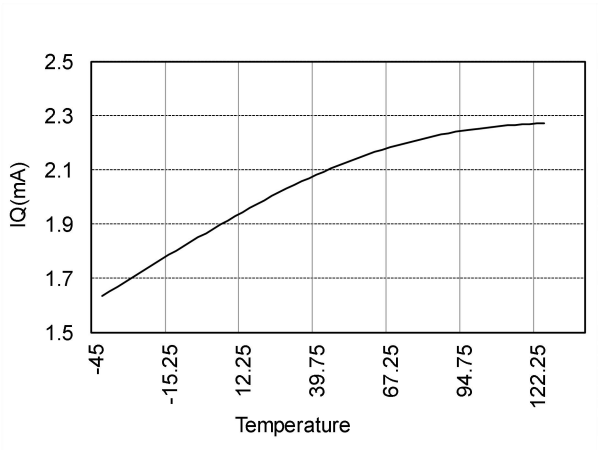

Fig.7-3. IQ vs Temperature

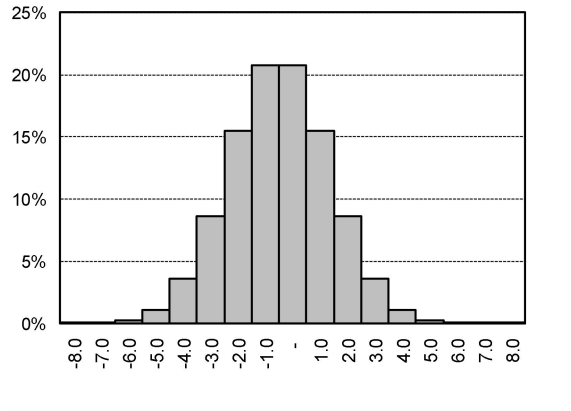

Fig.7-4. Offset Voltage

8 Detailed Description

The GT896X series are low-power, ultra-high-speed comparators with internal hysteresis. The devices are optimized for low voltage operation from 2.5V to 5.5V supply. The GT896X series are suitable for portable equipment. They can be compatible with CMOS and TTL logics.

There are a lot of comparators switched frequently for the linear region as the effect of noise and parasitic parameters, and the condition of this negative situation is when the one input of the comparator tends to reach the other input voltage. In order to ease the effect of noise and parasitic parameter, there is a 6mV internal hysteresis inside these comparators.

There are two trip points which are made by the comparator: the trip points when rising edge occurs and the trip points when falling edge occurs. And the gap between two trip points is the hysteresis of the comparator. The offset voltage Vos is defined as the average value of the two trip points. For the condition which two inputs of the comparator are nearly equal, the internal hysteresis will launch to avoid the frequently switching at this case.

9 Application Note

The GT896X family's power supply pin should have a local bypass capacitor (i.e., 0.01μF to 0.1μF) within 2mm for good high frequency performance. It can also use a bulk capacitor (i.e., 1μF or larger) within 100mm to provide large, slow currents. This bulk capacitor can be shared with other analog parts.

Good ground layout improves performance by decreasing the amount of stray capacitance and noise at the comparator's inputs and outputs. To decrease stray capacitance, minimize PCB lengths and resistor leads, and place external components as close to the comparator' pins as possible.

The GT896X family is a series of fast-switching, high-speed comparator and requires high-speed layout considerations. For best results, the following layout guidelines should be followed:

1. Use a printed circuit board (PCB) with a good, unbroken low-inductance ground plane.

2. Place a decoupling capacitor (0.1μF ceramic, surface-mount capacitor) as close as possible to supply.

3. On the inputs and the output, keep lead lengths as short as possible to avoid unwanted parasitic feedback around the comparator. Keep inputs away from the output.

4. Solder the device directly to the PCB rather than using a socket.

5. For slow-moving input signals, take care to prevent parasitic feedback. A small capacitor (1000 pF or less) placed between the inputs can help eliminate oscillations in the transition region. This capacitor causes some degradation to propagation delay when the impedance is low. The topside ground plane should be placed between the output and inputs.

6. The ground pin ground trace should run under the device up to the bypass capacitor, thus shielding the inputs from the outputs.

10 Package Outline Dimension

SC70-5

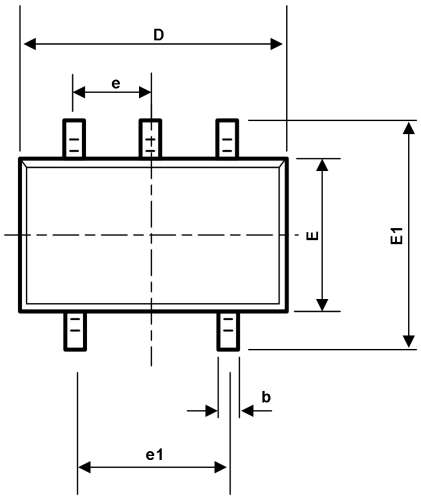

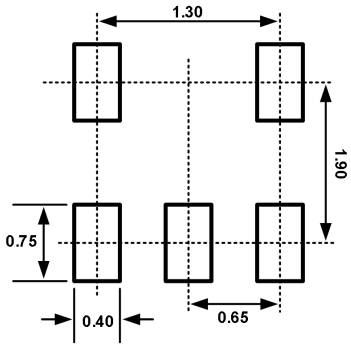

Recommended Land Pattern (Unit: mm)

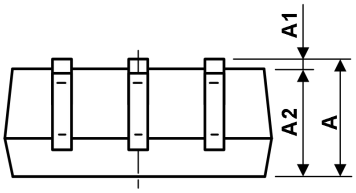

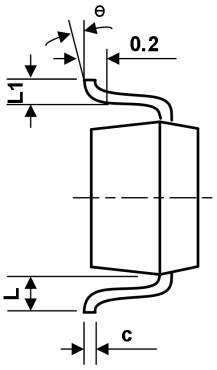

Symbol	Dimensions in Millimeters		Dimensions in Inches	
	Min.	Max.	Min.	Max.
A	0.900	1.100	0.035	0.043
A1	0.000	0.100	0.000	0.004
A2	0.900	1.000	0.035	0.039
b	0.150	0.350	0.006	0.014
c	0.110	0.175	0.004	0.007
D	2.000	2.200	0.079	0.087
E	1.150	1.350	0.045	0.053
E1	2.150	2.450	0.085	0.096
e	0.650TYP		0.026TYP	
e1	1.200	1.400	0.047	0.055
L	0.525REF		0.021REF	
L1	0.260	0.460	0.010	0.018
θ	0°	8°	0°	8°

10 Package Outline Dimension(Continued)

SOT23-5

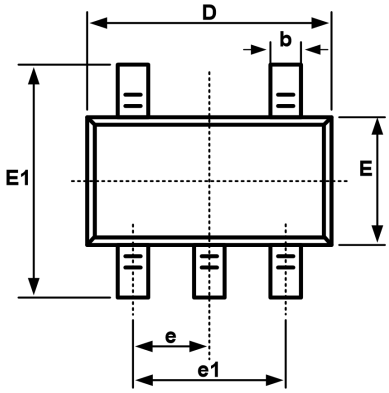

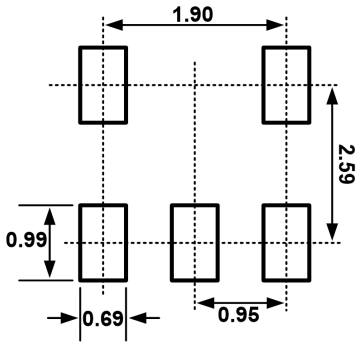

Recommended Land Pattern (Unit: mm)

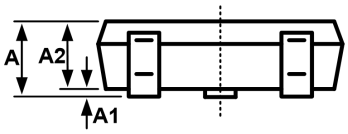

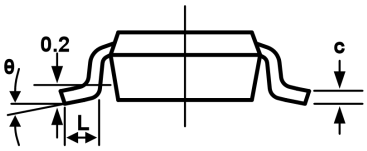

Symbol	Dimensions in Millimeters		Dimensions in Inches	
	Min.	Max.	Min.	Max.
A	1.050	1.250	0.041	0.049
A1	0.000	0.100	0.000	0.004
A2	1.050	1.150	0.041	0.045
b	0.300	0.500	0.012	0.020
c	0.100	0.200	0.004	0.008
D	2.820	3.020	0.111	0.119
E	1.500	1.700	0.059	0.067
E1	2.650	2.950	0.104	0.116
e	0.950(BSC)		0.037(BSC)	
e1	1.800	2.000	0.071	0.079
L	0.300	0.600	0.012	0.024
θ	0°	8°	0°	8°

10 Package Outline Dimension(Continued)

MSOP8

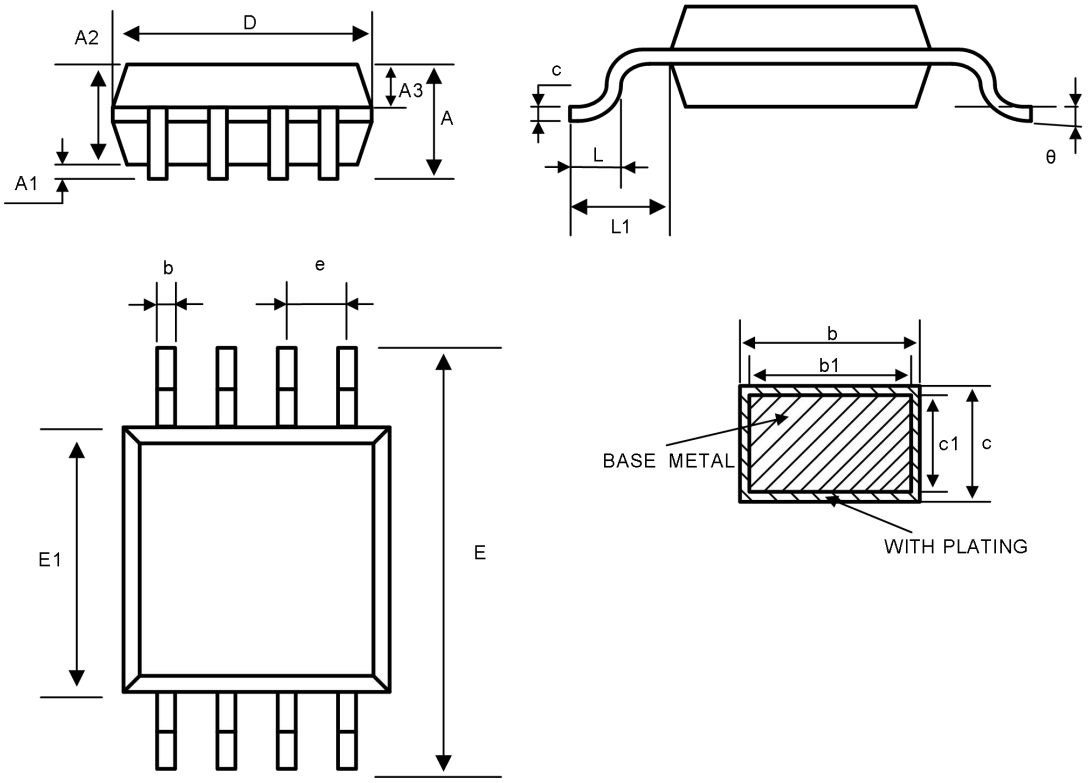

Symbol	Dimensions in Millimeters			Dimensions in Inches		
	Min.	Nom.	Max.	Min.	Nom.	Max.
A	—	—	1.10	—	—	0.043
A1	0.05	—	0.15	0.002	—	0.006
A2	0.75	0.85	0.95	0.030	0.033	0.037
A3	0.30	0.35	0.40	0.012	0.014	0.016
b	0.28	—	0.36	0.011	—	0.014
b1	0.27	0.30	0.33	0.011	0.012	0.013
c	0.15	—	0.19	0.006	—	0.007
c1	0.14	0.15	0.16	0.006	0.006	0.006
D	2.90	3.00	3.10	0.114	0.118	0.122
E	4.70	4.90	5.10	0.185	0.193	0.201
E1	2.90	3.00	3.10	0.114	0.118	0.122
e	0.65BSC			0.026BSC		
L	0.40	—	0.70	0.016	—	0.028
L1	0.95REF			0.037REF		
θ	0	—	8°	0	—	8°

10 Package Outline Dimension(Continued)

SOP8

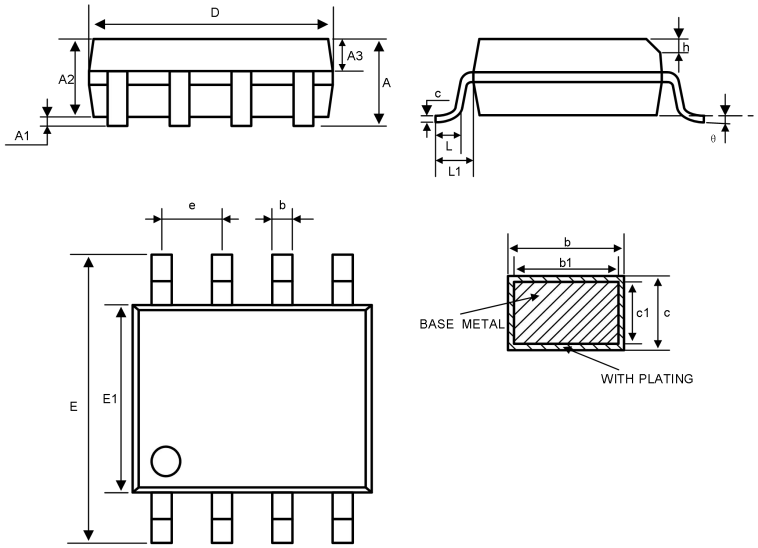

Symbol	Dimensions in Millimeters			Dimensions in Inches		
	Min.	Nom.	Max.	Min.	Nom.	Max.
A	—	—	1.75	—	—	0.069
A1	0.10	—	0.225	0.004	—	0.009
A2	1.30	1.40	1.50	0.051	0.055	0.059
A3	0.60	0.65	0.70	0.024	0.026	0.028
b	0.39	—	0.47	0.015	—	0.019
b1	0.38	0.41	0.44	0.015	0.016	0.017
c	0.20	—	0.24	0.008	—	0.009
c1	0.19	0.20	0.21	0.007	0.008	0.008
D	4.80	4.90	5.00	0.189	0.193	0.197
E	5.80	6.00	6.20	0.228	0.236	0.244
E1	3.80	3.90	4.00	0.150	0.154	0.157
e	1.27BSC			0.05BSC		
h	0.25	—	0.50	0.010	—	0.020
L	0.50	—	0.80	0.020	—	0.031
L1	1.05REF			0.041REF		
θ	0	—	8°	0	—	8°

10 Package Outline Dimension(Continued)

TSSOP14

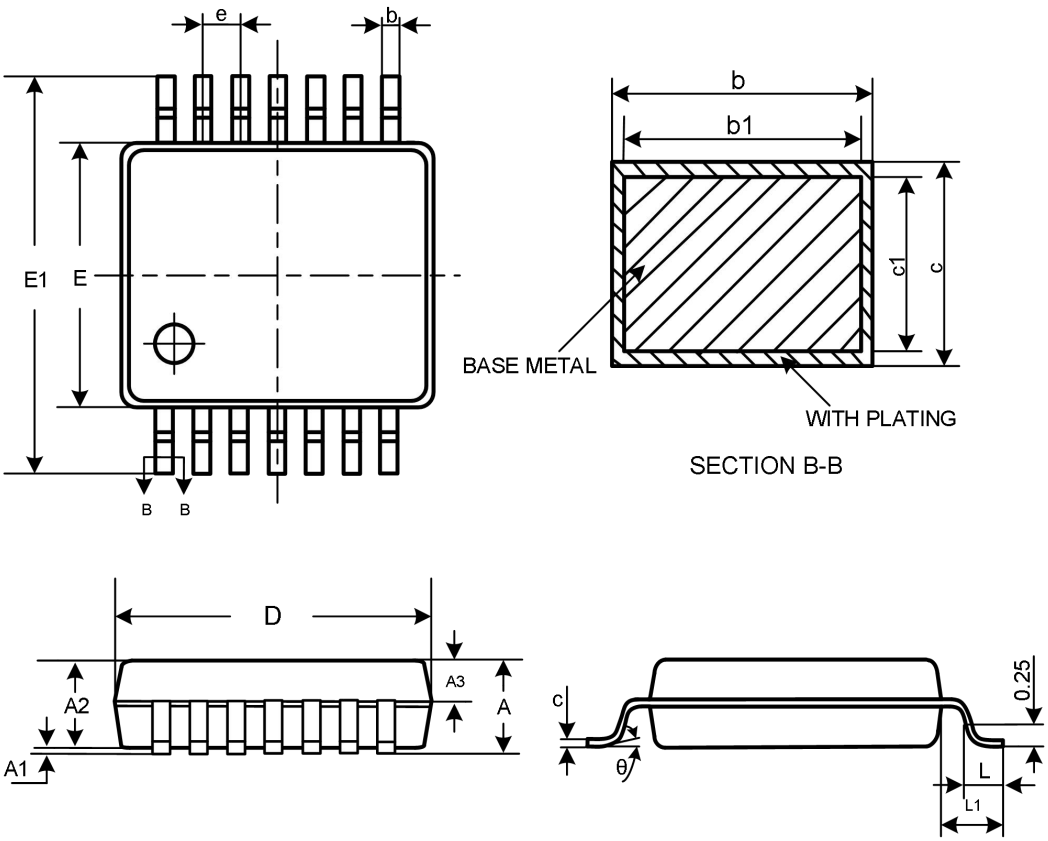

Symbol	Dimensions in Millimeters			Dimensions in Inches		
	Min	Nom	Max	Min	Nom	Max
A	——	——	1.20	——	——	0.047
A1	0.05	——	0.15	0.002	——	0.006
A2	0.90	1.00	1.05	0.035	0.039	0.041
A3	0.39	0.44	0.49	0.015	0.017	0.019
b	0.20	——	0.28	0.008	——	0.011
b1	0.19	0.22	0.25	0.007	0.009	0.010
c	0.13	——	0.17	0.005	——	0.007
c1	0.12	0.13	0.14	0.005	0.005	0.006
D	4.90	5.00	5.10	0.193	0.197	0.201
E	4.30	4.40	4.50	0.169	0.173	0.177
E1	6.20	6.40	6.60	0.244	0.252	0.260
e	0.65BSC			0.026BSC		
L	0.45	0.60	0.75	0.018	0.024	0.030
L1	1.00BCS			0.039BSC		
θ	0	——	8°	0	——	8°

10 Package Outline Dimension(Continued)

SOP14

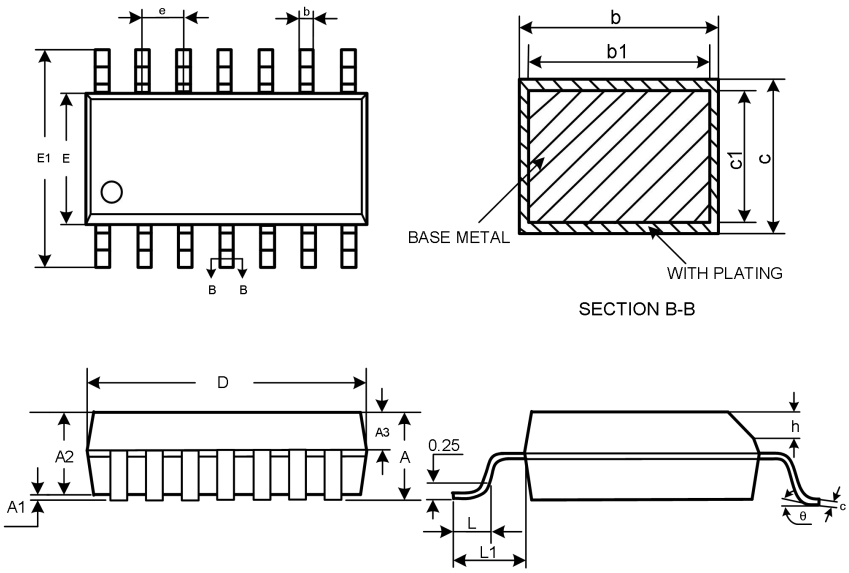

Symbol	Dimensions in Millimeters			Dimensions in Inches		
	Min	Nom	Max	Min	Nom	Max
A	——	——	1.75	——	——	0.069
A1	0.10	——	0.225	0.004	——	0.009
A2	1.30	1.40	1.50	0.051	0.055	0.059
A3	0.60	0.65	0.70	0.024	0.026	0.028
b	0.39	——	0.47	0.015	——	0.019
b1	0.38	0.41	0.44	0.015	0.016	0.017
c	0.20	——	0.24	0.008	——	0.009
c1	0.19	0.20	0.21	0.007	0.008	0.008
D	8.55	8.65	8.75	0.337	0.341	0.344
E1	5.80	6.00	6.20	0.228	0.236	0.244
E	3.80	3.90	4.00	0.150	0.154	0.157
e	1.27BSC			0.05BSC		
h	0.25	——	0.50	0.010	——	0.020
L	0.50	——	0.80	0.020	——	0.031
L1	1.05REF			0.041REF		
θ	0	——	8°	0	——	8°

11 Tape and Reel Information

Reel Dimensions **Reel Dimensions**

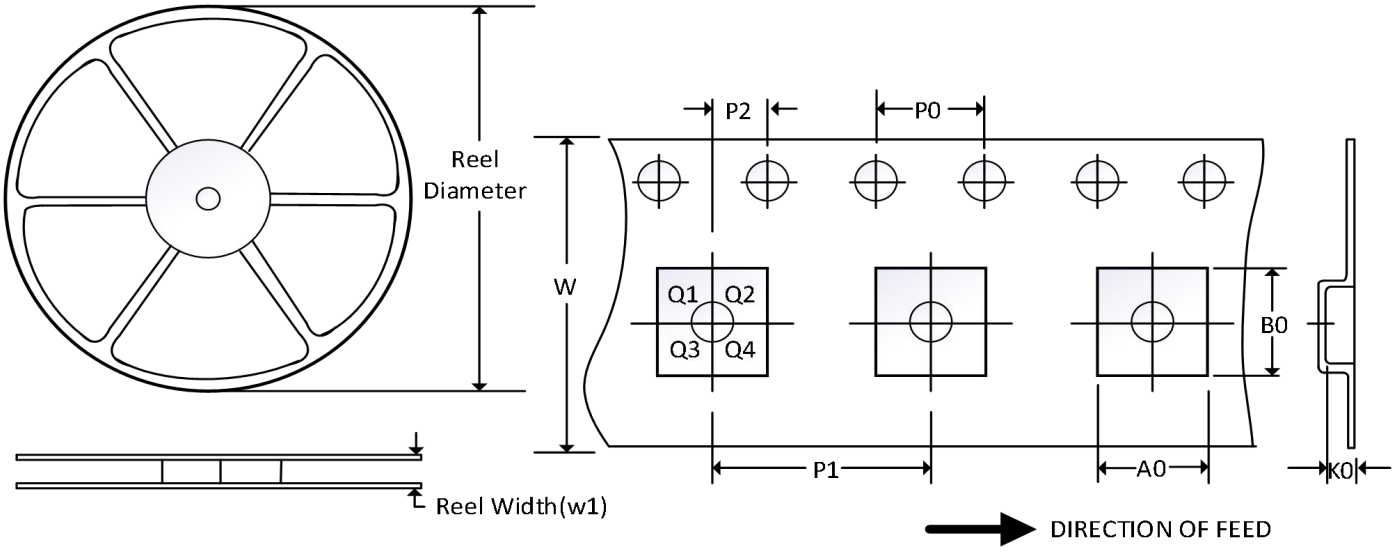

NOTE: The picture is only for reference. Please make the object as the standard.

Key Parameter List of Tape and Reel

Package Type	Reel Diameter	Reel Width (mm)	A0 (mm)	B0 (mm)	K0 (mm)	P0 (mm)	P1 (mm)	P2 (mm)	W (mm)	Pin1 Quadrant
SOT23-5	7''	9.5	3.20	3.20	1.40	4.0	4.0	2.0	8.0	Q3
SC70-5	7''	9.5	2.25	2.55	1.20	4.0	4.0	2.0	8.0	Q3
MSOP8	13''	12.4	5.20	3.30	1.50	4.0	8.0	2.0	12.0	Q1
TSSOP14	13''	12.4	6.95	5.60	1.20	4.0	8.0	2.0	12.0	Q1
SOP8	13''	12.4	6.40	5.40	2.10	4.0	8.0	2.0	12.0	Q1
SOP14	13''	16.4	6.60	9.30	2.10	4.0	8.0	2.0	16.0	Q1

NOTE:
1. All dimensions are nominal.
2. Plastic or metal protrusions of 0.15mm maximum per side are not included.